TECNODIN

DATA SHEET
PRODUCT

420001 ADJUSTABLE FEET 80/102/124 WITH THREADED STAINLESS STEEL STUD



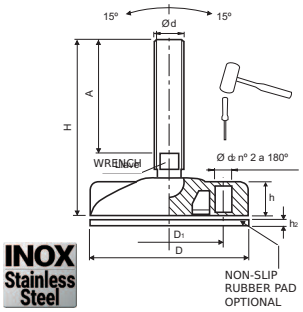

INOX Stainless Steel

PA black reinforced polyamide.
Stainless steel stud AISI-304.
*Max. static load (vertical stud).
Holes can be opened with the help of a hammer for fixing the foot to the floor.
Other studs lenghts, please ask.



Available in blue color RAL 5005 for Ø80.

Code	D	D1	h	d	A	H	d2	Wrench	h2	Kg*
42000108550	80	54	17,3	M8	45	74	9	6	3	1200
42000108551	80	54	17,3	M8	65	94	9	6	3	1200
42000108552	80	54	17,3	M10	35	66	9	8	3	1400
42000108553	80	54	17,3	M10	70	101	9	8	3	1400
42000108554	80	54	17,3	M12	43	76	9	10	3	1500
42000108555	80	54	17,3	M12	77	111	9	10	3	1500
42000108556	80	54	17,3	M16	60	97	9	13	3	1900
42000108557	80	54	17,3	M16	125	162	9	13	3	1900
42000108558	80	54	17,3	M20	116	157	9	17	3	2100
42000110550	102	74	20,3	M16	90	130	10,5	13	3	2200
42000110551	102	74	20,3	M16	125	165	10,5	13	3	2200
42000110552	102	74	20,3	M16	165	205	10,5	13	3	2200
42000110553	102	74	20,3	M20	116	160	10,5	17	3	2400
42000110554	102	74	20,3	M20	198	242	10,5	17	3	2400
42000112550	124	94	24,3	M16	90	134	10,5	13	3	2500
42000112551	124	94	24,3	M16	125	169	10,5	13	3	2500
42000112552	124	94	24,3	M16	165	209	10,5	13	3	2500
42000112553	124	94	24,3	M20	116	164	10,5	17	3	2700
42000112554	124	94	24,3	M20	198	246	10,5	17	3	2700

Locknut available.

Optional: PVC non-slip rubber pad.
Supplied not mounted.
Ø 80 mm Code: 42005001080.
Ø 102 mm Code: 42005001100.
Ø 124 mm Code: 42005001120.